Biofuel production via thermal gasification of biomass

By Lasse Røngaard Clausen
Assistant professor
Section of Thermal Energy

Technical University of Denmark (DTU)

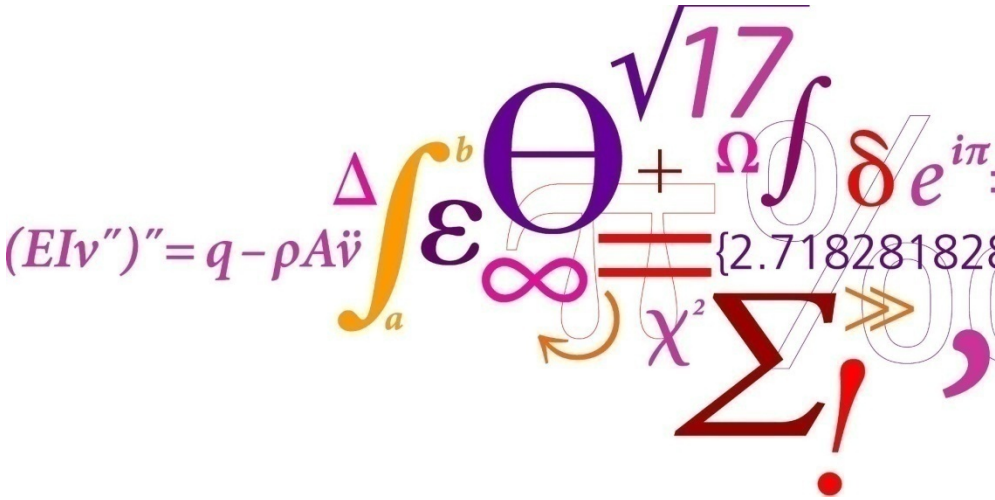

DTU Mechanical Engineering
Department of Mechanical Engineering

Who am I?

- Assistant Professor at the Section of Thermal Energy

- Expertise in thermodynamic modeling and energy/exergy optimization of complex energy systems
  - Focus on biofuel production via thermal gasification

- Other research interests:
  - Exergy analysis of energy systems
  - Thermoeconomics
  - Integration of agriculture in the energy system – nutrient recycling

- Recent projects at the Section of Thermal Energy
  - High temperature heat pumps
  - Low temperature heat to power (ORC, Kalina, other mixtures of working fluids, solar thermal power)

Biofuel production via thermal gasification

An overview

Biomass

Gasifier

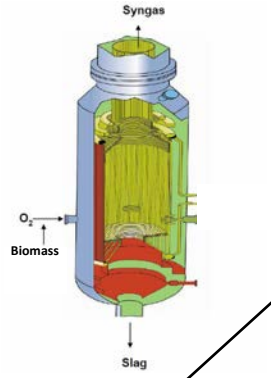

Syngas (synthesis gas)

- Consist of CO and H_2
  (the building blocks for chemical synthesis)

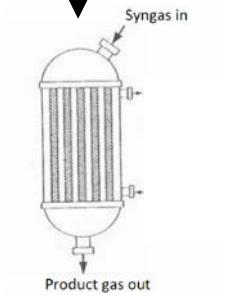

Synthesis reactor

Liquid fuel

Agenda

- Gasification of biomass
  - Gasifiers developed at DTU

- Biofuel production plants
  - Proposed designs
    - Biofuel plants based on entrained flow gasification of torrefied biomass
    - Biofuel plants plants based on the Two-Stage Gasifier
    - Biofuel plants integrating electrolysis of water
  - Future work
    - Biofuel plants based on an oxygen-blown Two-Stage Gasifier
    - Biofuel plants based on an entrained flow gasifier with integrated torrefaction of biomass

Gasifiers developed at DTU:

The Two-Stage Gasifier

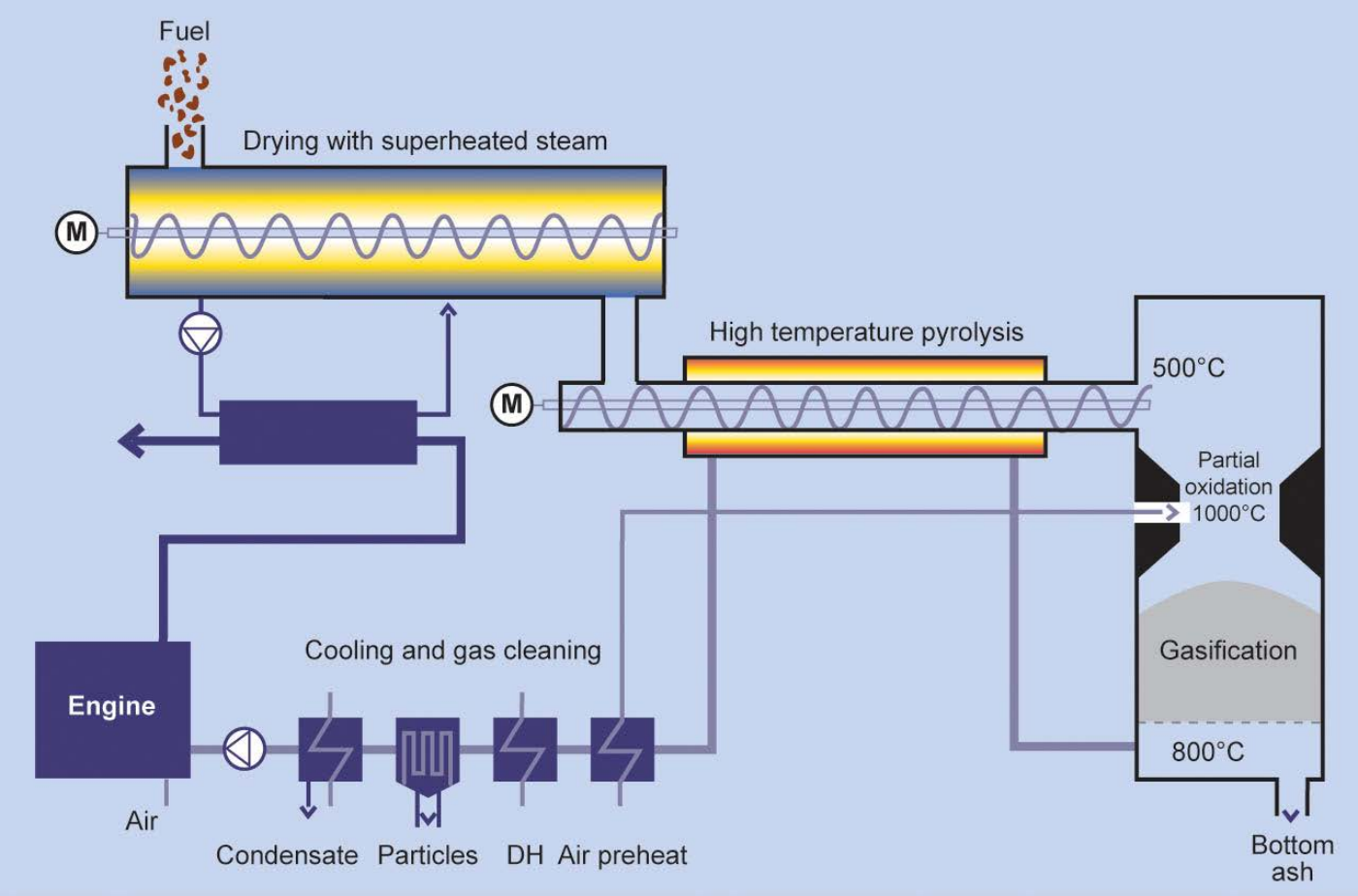

- Downdraft fixed bed
- High energy efficiency (~93%)
- No tar and low CH_4 in gas
- Temperature out: 730°C
- Small-scale plant (max 5 MWth)

Gasifiers developed at DTU:

The Two-Stage Gasifier (The Viking Gasifier)

- The Viking gasifier (picture) is 15-20 kWe
- It has been successfully upscaled to 100 kWe
- A 500 kWe plant is being built at the moment.
- The Technology is now owned by the Danish company Weiss.

Gasifiers developed at DTU:

The Pyroneer gasifier

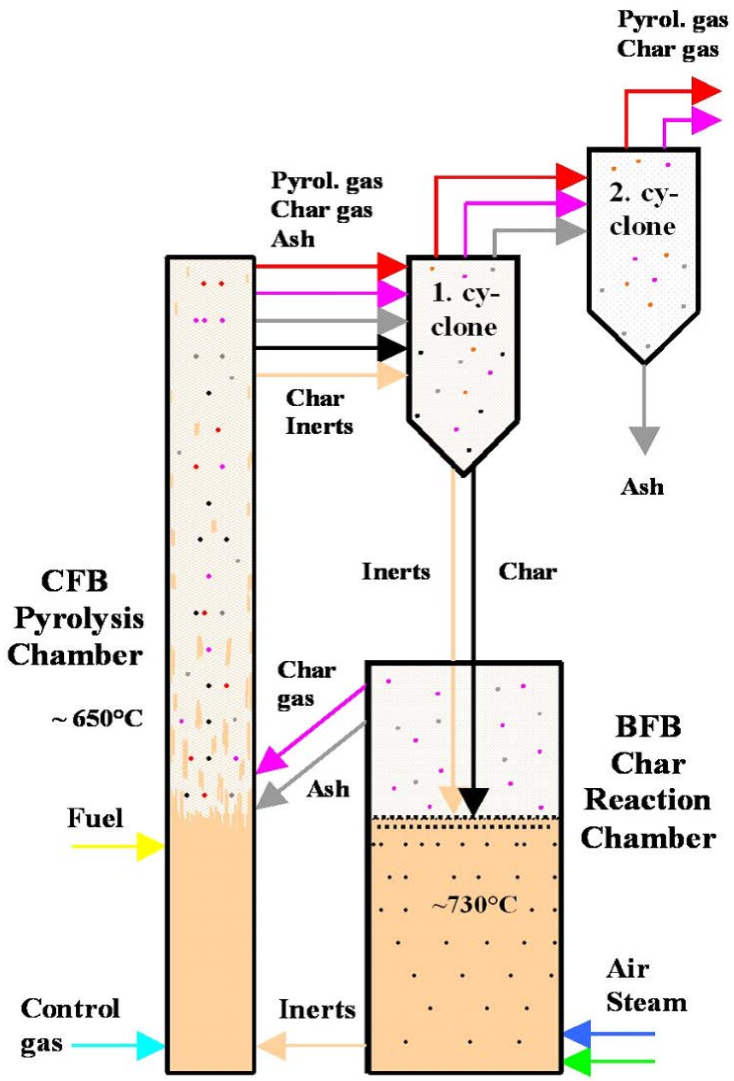

- 2 fluidized beds
- High tar and CH_4 in gas
- Temperature out: ~650°C
- Can convert almost any kind of biomass
  - Straw
  - Biogas residue
- The ash can be used as fertilizer because temperatures are below 730°C

Gasifiers developed at DTU:

The Pyroneer gasifier

- The Technology is now owned by the Danish power company DONG Energy
- A 6 MWth demonstration plant is under operation at the moment (picture).

Gasifiers developed at DTU:

The Pyroneer gasifier

- Straw
- Manure
- Biogas residue
- Wood
- Sewage sludge
- Industrial waste
- Household waste
- Other agricult. waste
- Meat-and-bone meal
- Etc.

Pyroneer gasifier, or
LT-CFB plant

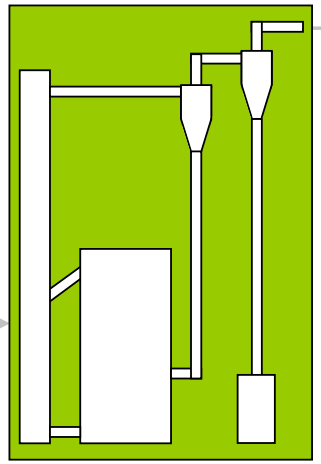

- Cofiring with coal, oil or gas into existing powerplant boilers
- Indirectly fired gasturbines
- Large Stirling engines
- Directly fired gasturbines, combustion engines or fuel cells (with gas cleaning)
- Production of liquid fuels or more valuable chemicals

Reforming of the tar and CH_4 in the gas is required

Suitable plant sizes : ~5-150 MWth (depending on the fuel and the application)

Agenda

- Who am I?

- Gasification of biomass
  - Gasifiers developed at DTU

- Biofuel production plants
  - Proposed designs
    - Biofuel plants based on entrained flow gasification of torrefied biomass
    - Biofuel plants plants based on the Two-Stage Gasifier
    - Biofuel plants integrating electrolysis of water
  - Future work
    - Biofuel plants based on an oxygen-blown Two-Stage Gasifier
    - Biofuel plants based on an entrained flow gasifier with integrated torrefaction of biomass

Biofuel production via thermal gasification

An overview

Biomass

Gasifier

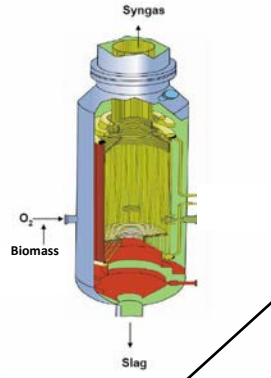

Syngas (synthesis gas)

- Consist of CO and H_2
  (the building blocks for chemical synthesis)

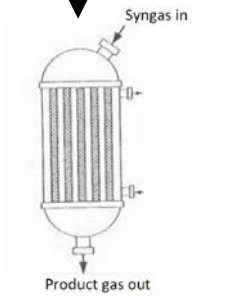

Synthesis reactor

Liquid fuel

Biofuel plants: Proposed designs

1. Biofuel plants based on entrained flow gasification of torrefied biomass
   - Shows the potential of state of the art within biofuel plants

2. Biofuel plants based on the Two-Stage Gasifier
   - Shows the potential of small-scale biofuel plants
   - Economy at this scale is a great challenge – this must be outweighed by the advantages of small-scale (high-efficiency gasifier, co-production of heat).

3. Biofuel plants integrating electrolysis of water
   - Enables full conversion of the carbon in the biomass to biofuel
   - Enables conversion of electricity from fluctuating renewables (wind, solar) to biofuel for the transportation sector.

Biofuel plants: Proposed designs (1/3)

Biofuel plants based on entrained flow gasification of torrefied biomass

- Very large scale is possible by using torrefied wood pellets as fuel.
- Torrefied wood has increased energy density (~20 MJ/kg), which increases gasifier energy efficiency.
- Almost all the syngas can be converted to fuel because the syngas contains few inerts (CH_4, N_2) – oxygen-blown gasification is used.

- Modeling shows potential of energy efficiencies up to 59% (LHV) from untreated wood to DME – 64% including net-electricity.

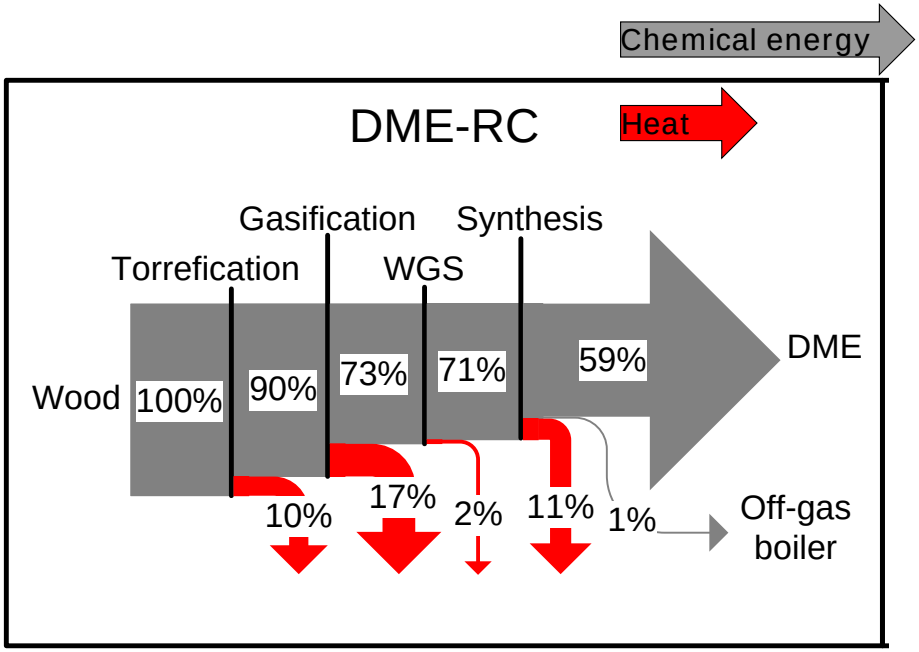

Biofuel plants: Proposed designs (2/3)

Biofuel plants based on the Two-Stage Gasifier

- Small-scale due to the Two-Stage Gasifier
- High energy efficiency due to high energy efficiency of gasifier
- Modeling shows potential of energy efficiencies up to 58% (LHV) from untreated wood to DME – no net-electricity.

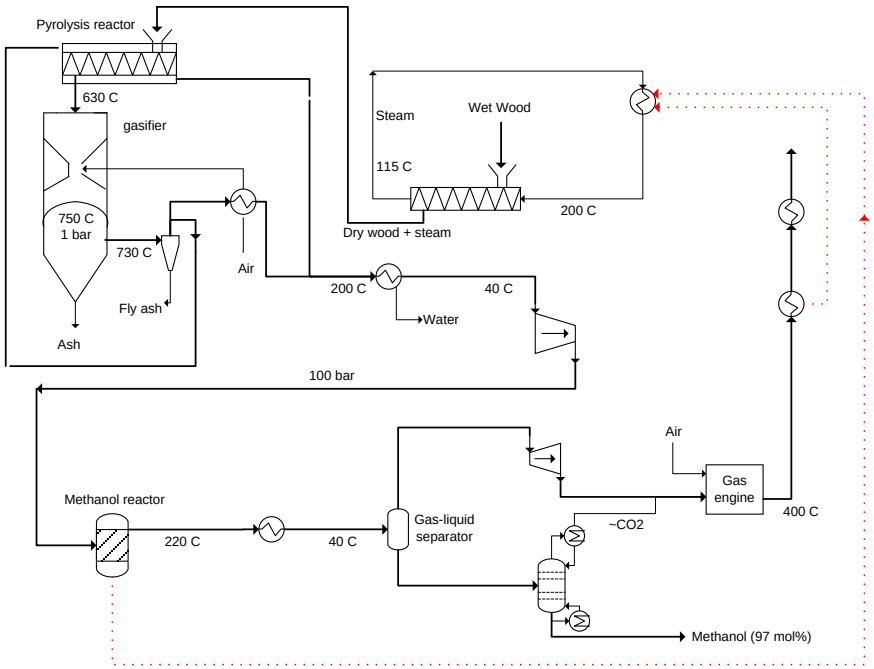

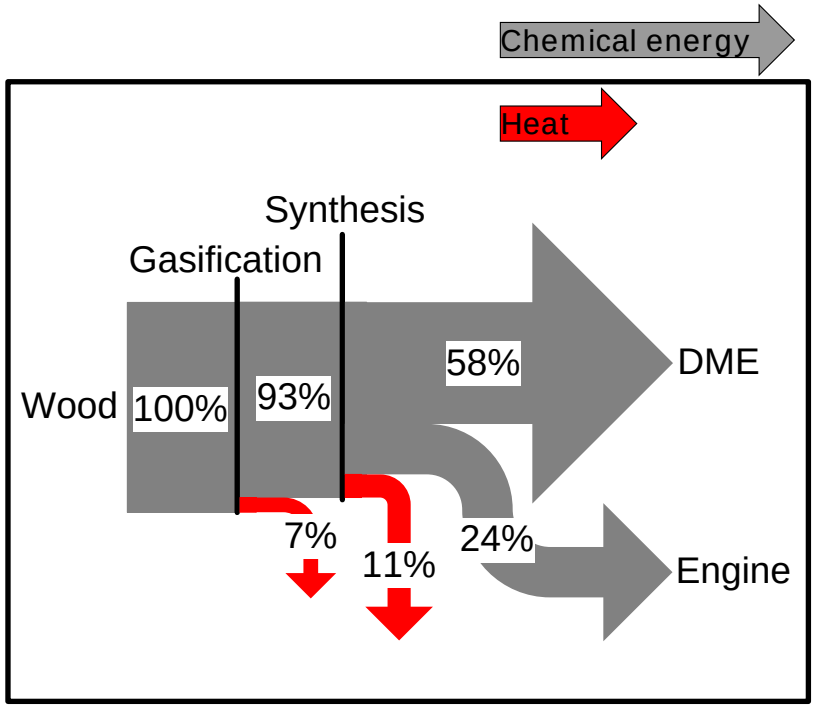

Biofuel plants: Proposed designs (3/3)

Biofuel plants integrating electrolysis of water

- All the carbon in the biomass ends up in the biofuel – therefore no CO_2 emission.
- Potential for storing surplus electricity from renewables (wind, solar, etc.)
- Modeling shows potential of energy efficiencies up to 115% from untreated wood to methanol – with electricity consumption the efficiency drops to 58%.

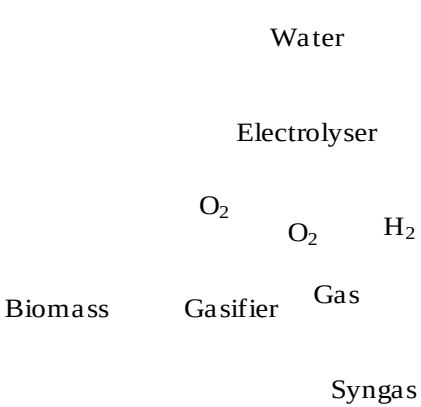

Typical gas composition from gasifier (mol%):

29% H_2
51% CO
7% CO_2
13% H_2O.

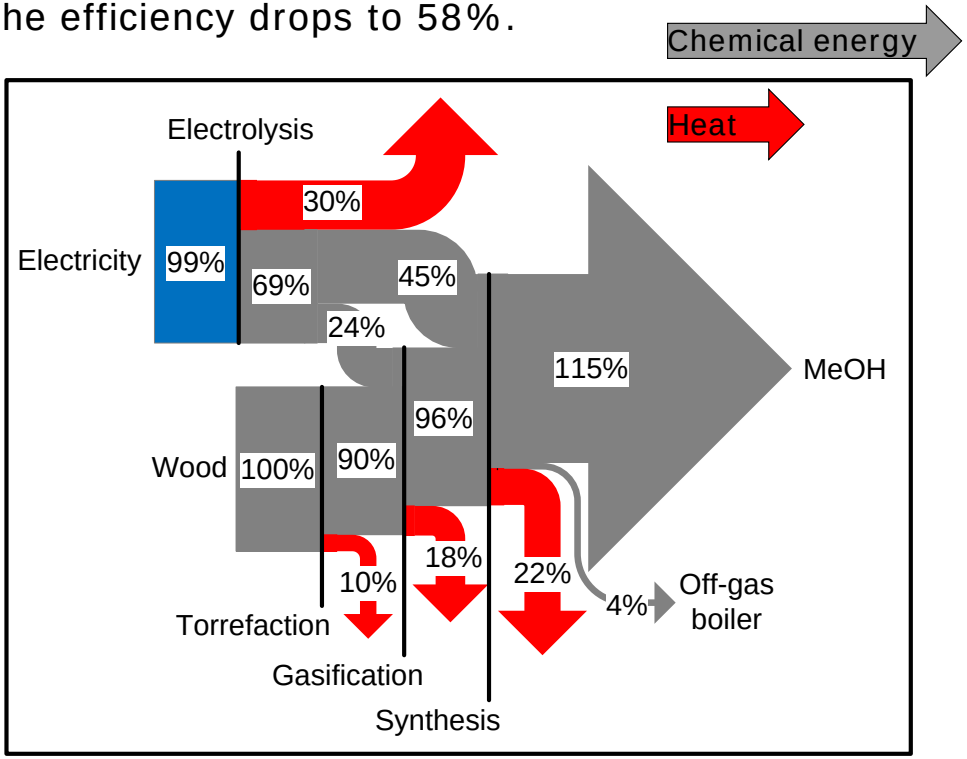

Why integrate electrolysis of H_2O/CO_2 in a biofuel plant?

- If great amounts of fluctuating renewables (wind, solar, etc.) needs to be integrated in the electricity grid. This is the case of Denmark:
  - In 2011 28% of the Danish electricity consumption was provided by wind.
  - In 2020 the official goal is 50%
  - In 2050 the official goal is a fossil free energy system.

- If the biomass resource shows to be very limited and expensive.

In a recent Danish Study (CEESA), Biofuel plants with integrated electrolysis supplies 44% of the fuel for the Danish transportation sector in the 2050 Scenario (see next slide).

The CEESA 2050 renewable energy scenario

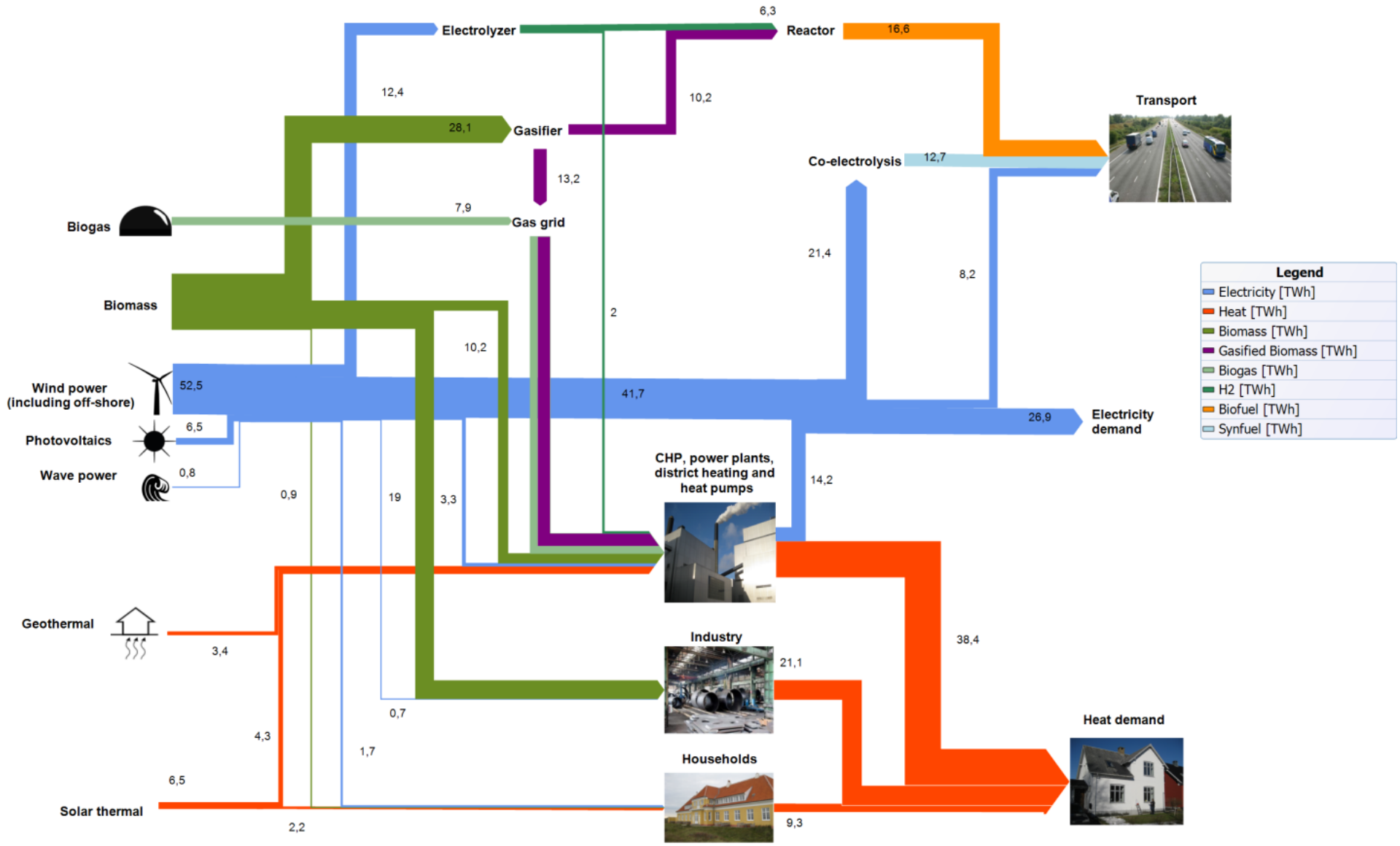

Agenda

- Gasification of biomass
  - Gasifiers developed at DTU

- Biofuel production plants
  - Proposed designs
    - Biofuel plants based on entrained flow gasification of torrefied biomass
    - Biofuel plants plants based on the Two-Stage Gasifier
    - Biofuel plants integrating electrolysis of water
  - Future work
    - Biofuel plants based on an oxygen-blown Two-Stage Gasifier
    - Biofuel plants based on an entrained flow gasifier with integrated torrefaction of biomass

Biofuel plants: Future work

The planned future work continues to explore the integration of electrolysis in biofuel plants

1. Biofuel plants based on an oxygen-blown Two-Stage Gasifier + SOEC/SOFC
   - Can reach unprecedented energy efficiencies (biomass + electricity $\Rightarrow$ biofuel)

2. Biofuel plants based on an entrained flow gasifier with integrated torrefaction of biomass + electrolysis
   - The loss of chemical energy due to torrefaction is eliminated
   - High energy efficiency

Biofuel plants: Future work (1/2)

Biofuel plants based on an oxygen-blown Two-Stage Gasifier + SOEC/SOFC

- Work based on the proposed designs: 2 and 3
- Higher energy efficiency due to greater conversion of syngas to biofuel (no N_2)
- Integration of a SOEC/SOFC. Used as SOEC when electricity is cheap – used as SOFC when electricity is expensive.

- The project will include both theoretical and experimental work.
- Partners:
  - The Gasification group at DTU
  - Haldor Topsoe
  - Danish Gas Technology Centre (DGC)

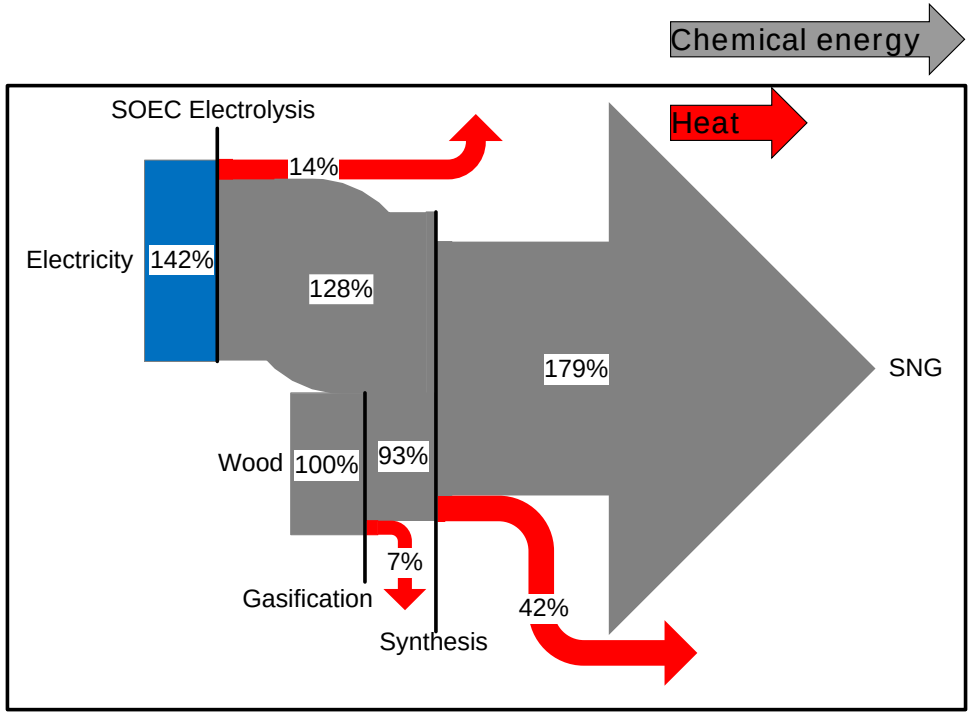

Biofuel plants: Future work (2/2)

Biofuel plants based on an entrained flow gasifier with integrated torrefaction of biomass + electrolysis

- Work based on the proposed designs: 1 and 3
- The volatiles released during torrefaction is used as a chemical quench in the gasifier. This increases gasifier efficiency, and ensures that no biomass is lost in the torrefaction.

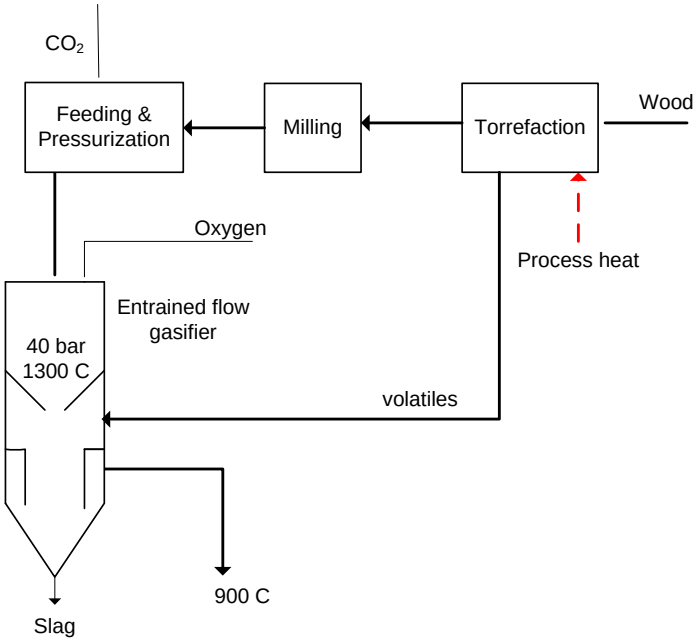

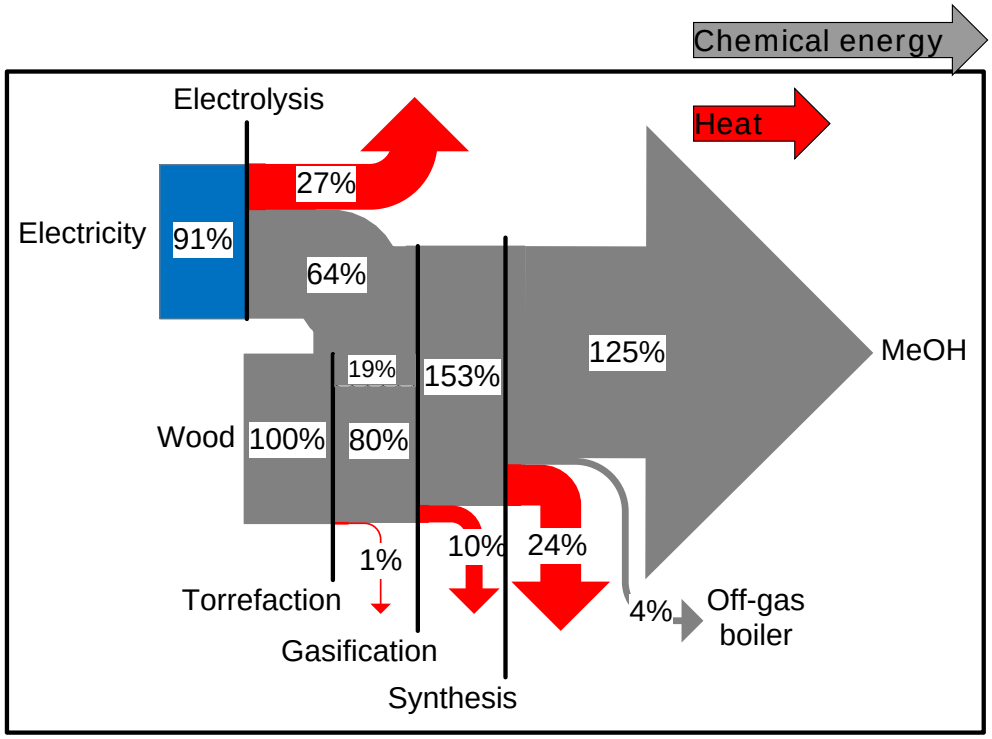

Biofuel production via thermal gasification

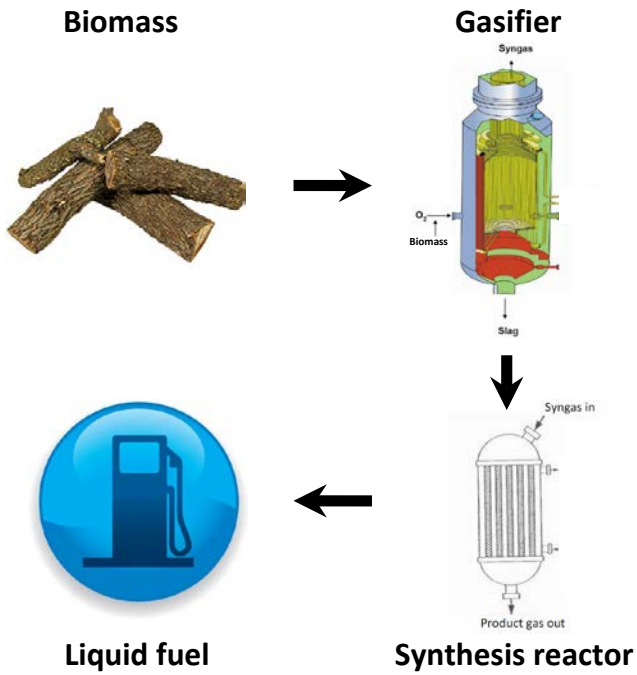

Thank you for your attention

extra slides

Hurdles to overcome before biofuel plants are commercial

- Cost
  - An incentive to use biomass instead of coal is needed
    - Subsidy on biomass
    - Tax on coal
    - Tax on CO_2 emission (best option, and also the main hurdle!!)

- Technical
  - Up scaling the demonstrated small-scale gasifiers
  - Using biomass on existing large-scale coal gasifiers

- Environmental
  - The biomass used must be sustainable (not replace food/feed production, net greenhouse gas emissions from land use change, etc.)

Biofuel plants

Polygeneration

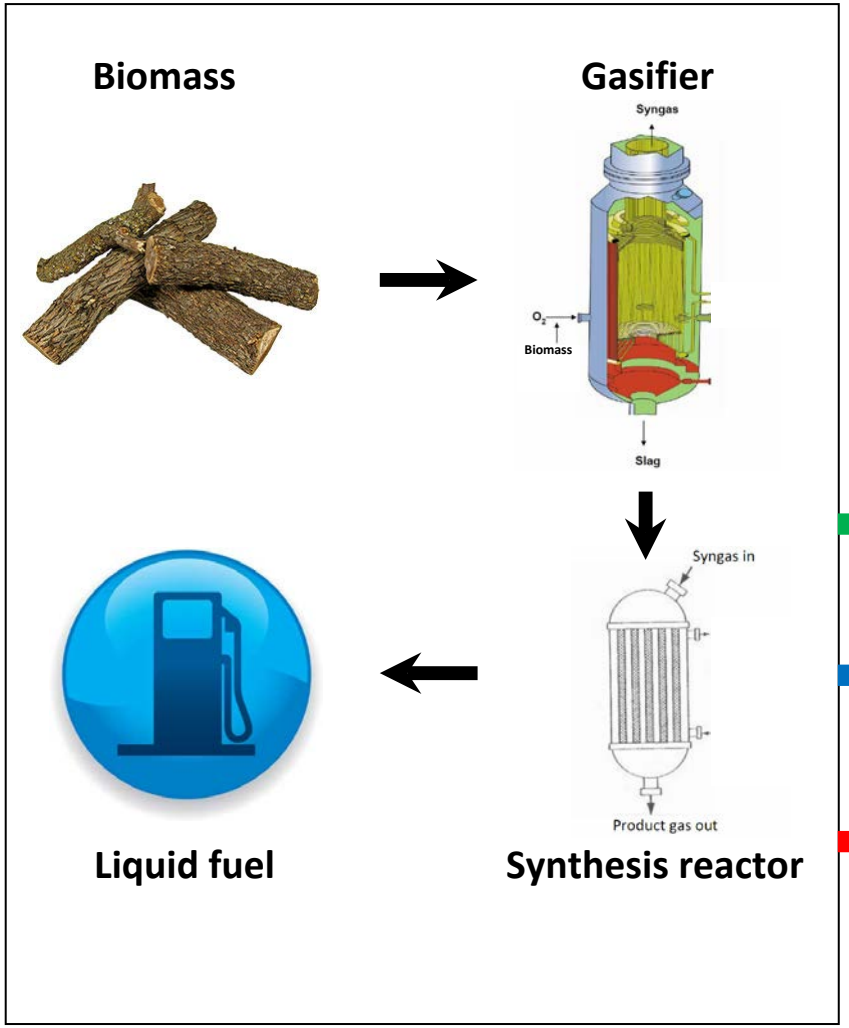

- The total energy efficiency of the biofuel plant can be increased by co-production of:
  - Electricity
  - Heat

Fuel

Electricity

Heat

Important aspects in the design of BTL plants

		Pros	Cons
Gasification	Air	Low cost, simple design	N_2 in syngas ⇒ lower conversion of syngas to fuel
	Oxygen	No N_2 in syngas ⇒ higher conversion of syngas to fuel	Cost and electricity consumption of oxygen plant
	Atmospheric	Cost of gasifier, simple design	High electricity consumption for pressurization of syngas
	Pressurized	Low electricity consumption for pressurization of syngas	Cost of gasifier
Synthesis	Recycle of unconverted syngas (RC)	Higher conversion of syngas to fuel	Lower electricity co-production
	Once through synthesis (OT)	Higher electricity co-production	Lower conversion of syngas to fuel

The processes in a biofuel plant

Generic biofuel plant (DME) showing the important processes

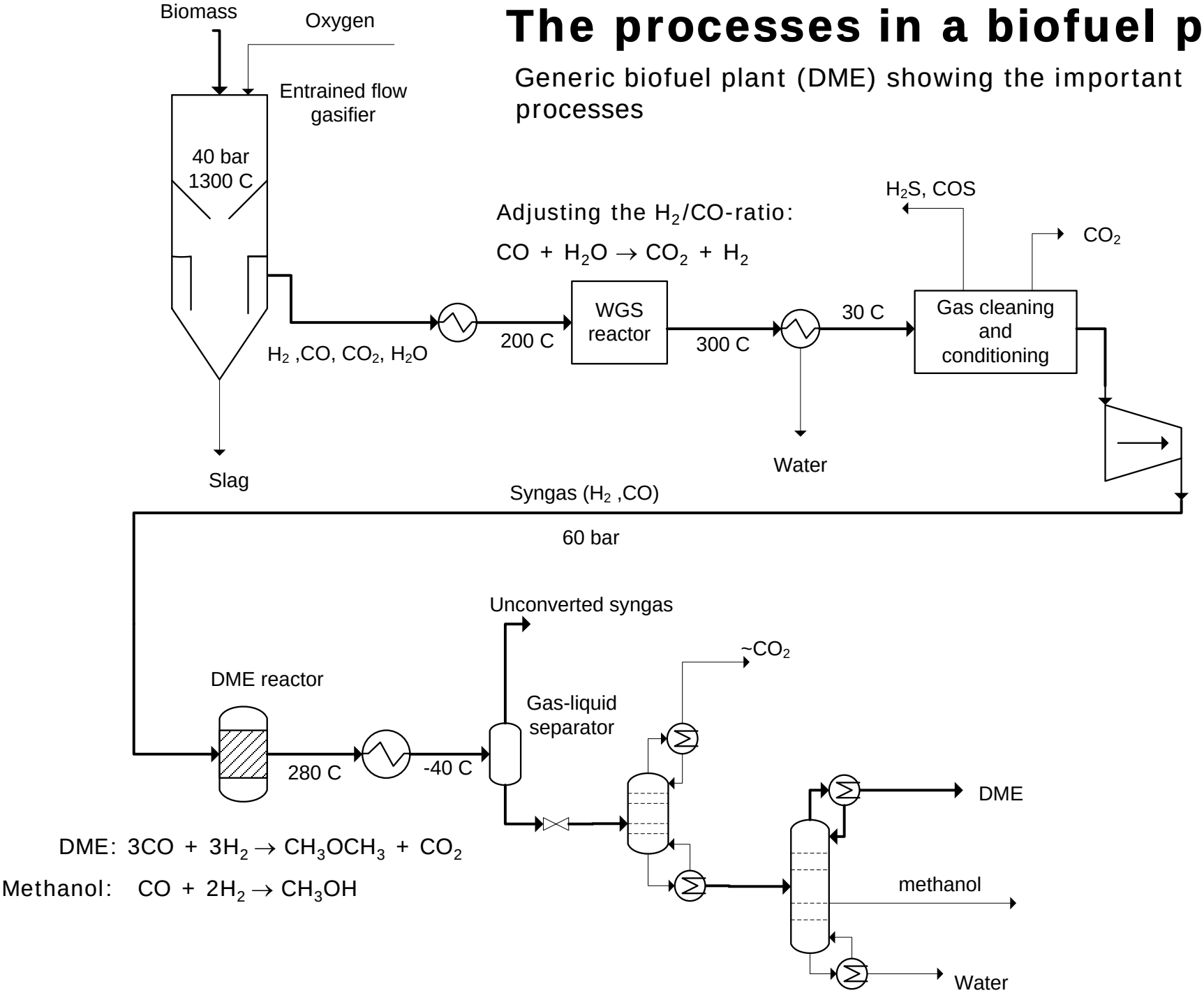

Adjusting the H_2/CO-ratio:

$CO + H_2O \rightarrow CO_2 + H_2$

DME: $3CO + 3H_2 \rightarrow CH_3OCH_3 + CO_2$

Methanol: $CO + 2H_2 \rightarrow CH_3OH$

Gasifier types

Fixed bed gasifier
- Updraft
- Downdraft

Fluidized bed gasifier

Entrained flow gasifier