ERATO

Maenaka Human-Sensing Fusion

# For a safe and healthy life

2012 Spring

# Maenaka Human-Sensing Fusion Project

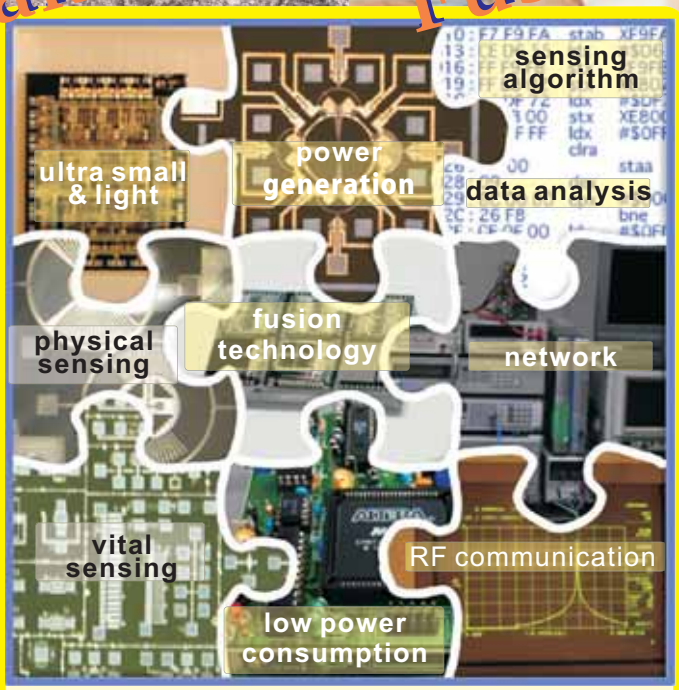


**Technology fusion of sensors, circuits and software for a safe and healthy life**

# ADHESIVE HUMAN MONITORING SENSOR

**Outline and Research Target:** Maenaka Human-Sensing Fusion Project started as one of ERATO (Exploratory Research for Advanced Technology) projects which JST (Japan Science and Technology Agency) financially supports at April 1st of 2008. This project has been led by Kazusuke Maenaka, a Professor of Department of Electrical Engineering and Computer Sciences, University of Hyogo.

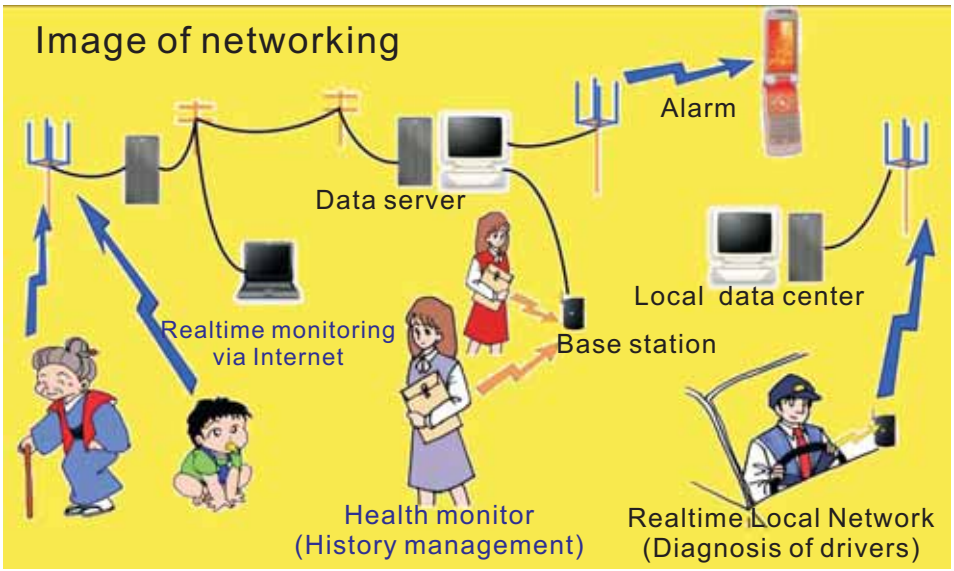


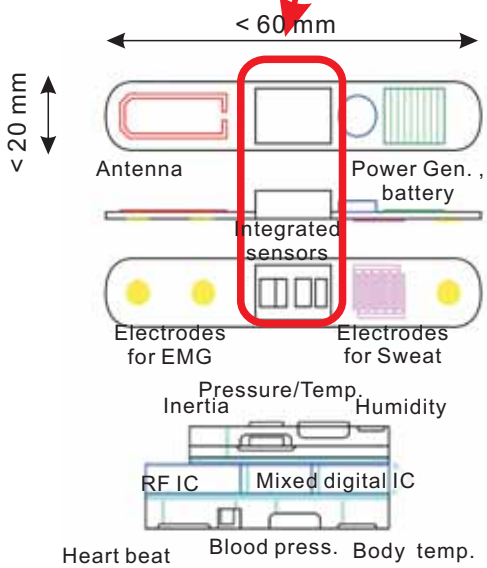


Final Image of Band-aid Sensor System

The declining birthrate, the graying of society, the increasing incidence of so-called “lifestyle diseases”: the rise of these and other problems related to changes in the social environment have let to increased interest in issues of safety, welfare and health care. To avoid dying alone, dying from overwork, fatal injury caused by carelessness, or disease attributable to neglecting our health, it would be desirable to monitor our physical condition, our activities and our surroundings in a number of ways, continuously and at all times without the assistance of others and to do necessary medical treatment in case of emergency. In this research field, we aim to develop a human body monitoring system through the integration of wireless communication devices, power generation devices, and sensor devices.

**Research Plan and Research System:** We've assembled four groups that have committed to developing an integrated system of ultra-small sensors that consumes little energy, contains its own ultra-small power supply mechanism, and utilizes low power wireless networking.

(1) Device (Sensor Device and PZT Device ) Research Groups

Device Research Groups are composed of two groups, that is, Sensor Device Group and PZT Device Group and are tasked with developing ultra-small integrated sensors that consume little energy and that detect various physical, vital and environmental quantities such as acceleration, pulse, temperature, moisture and so on using functional materials. In particular, PZT Device Group studies sensors and actuators using Pb(ZrxTi1-x)O3 (Lead Zirconate Titanate). They develop PZT thin film dry process compatible with Si process. These teams are also investigating the layout and assembly of sensor elements.

(2) System (Circuit and Software) Research Group

Researchers in this group are developing integrated circuits including analog circuits for sensor outputs, AD converters, digital signal processors, memory devices and an RF interface (315MHz or 1.2GHz band) using CMOS technology focusing on low power consumption circuits with a programmable standby mode. They are also developing packaging and via hole interconnection technology by thinning and stacking circuit chips.

The investigators in this group are also evaluating what kind of sensors with what characteristics should be used in a target sensing system through initial clinical testing using a prototype sensing system that we call "large model". In this way they are forming an overall picture of the human-monitoring system to be developed. Moreover they take responsibility for developing a low energy consumption RF communication protocol between a device attached to the human body and a base station, along with highly confidential networking technology and an algorithm capable of understanding a person's physical situation through sensor outputs.

(3) Micro Power Research Group

This group is assigned to investigate power generation and storage mechanisms and to embed a small power supply into the above human monitoring sensor system. They are studying technology for converting human motion into electrical power using piezoelectric or magnetic thin film as well as micro fuel cells.

## Schedule:

| FY.07 | FY.2008 | FY.2009 | FY.2010 | FY.2011 | FY.2012 |
|---|---|---|---|---|---|
| Examination of Sytem concept and method<br>Development of elemental device technology | | | Systemizing and packaging | Field test with a body-worn sensing system | Wrap-up |

## Members:

| | | | |
|---|---|---|---|
| | Kazusuke Maenaka | Project leader | 2007.10~ |
| Sensor Device group | Hidekuni Takao | Group leader | 2010.05~ |
| | Hao Xiuchun | Researcher | 2008.04~ |
| | Hiroyuki Hamada | 〃 | 2009.10~ |
| | Kazuo Kasai | Research Engineer | 2008.04~ |
| | Tokuji Yokomatsu | 〃 | 2010.02~ |
| | Atsuo Masuda | 〃 | 2012.01~ |
| | Takashi Saito | 〃 | 2011.04~ |
| | Haruka Takeuchi | 〃 | 2011.04~ |
| PZT Device group | Kensuke Kanda | Group leader | 2010.04~ |
| Micro Power group | Takayuki Fujita | Group leader | 2008.04~ |
| System (Circuit and assembly) group | Oleg Nizhnik | Researcher | 2010.04~ |
| | Olinver Vinluan | Research Engineer | 2010.09~ |
| | Travis Bartley | 〃 | 2010.10~ |
| | Ucu Maksudi | 〃 | 2011.04~ |
| | Akihiro Kubota | 〃 | 2012.02~ |
| | Junsi Gao | 〃 | 2012.04~ |
| System (Embedded software) group | Manabu Nii | Group leader | 2012.04~ |
| | Sayaka Okochi | 〃 | 2010.04~ |
| | Alex Chan Chun-kit | 〃 | 2011.03~ |
| | Hiroki Fujiwara | 〃 | 2012.01~ |
| Staff | Kohei Higuchi | Research Manager | 2008.04~ |
| | Kenji Nakasuji | Administrative Manager | 〃 |
| | Miho Kurata | Administrative Assistant | 2011.04~ |

# MEMS manufacturing equipments

ICP RIE for PZT
SAMCO, RIE-101HU

XeF2 gas etcher
SAMCO, VPE-4HU

Si DeepRIE
Sumitomo Precision,
MUC-21 ASE-Pegasus

PZT, Pt/Ti sputter
ULVAC, CS-200

Profiler
KLA-Tencor P-6

Furnaces

Multi-target sputter
Eiko-engineering
ES-250B

Wafer bonder
Ayumi Industry
VE-08-21

Confocal microscope
Lasertec, H1200

E-Beam exposure
Elionix, ELS-3700M

# other evaluation equipments

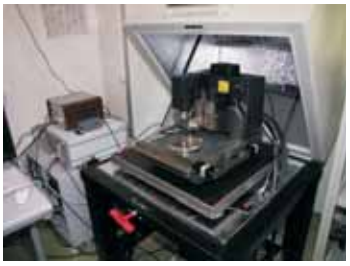

Atomic Force Microscope
Veeco, Nanoscope

High resolution FE-SEM
Hitachi, S-5000H

SEM with EDS
JEOL,JSM6510LA

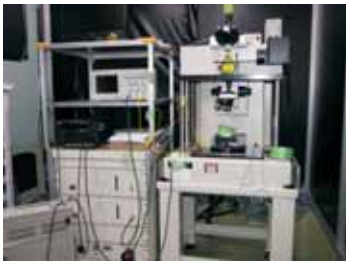

Laser Doppler vibrometer
Neoarc, MLD-103A

Open Labs., Bldg. 8111, University of Hyogo,
2167 Shosha, Himeji, Hyogo Prefecture, 671-2280, JAPAN
TEL:+81-79-267-6019, FAX:+81-79-229-9021, URL: http://www.eratokm.jp
Contact: Kohei Higuchi, Kenji Nakasuji e-mail:info@eratokm.jp